Tri Motion

Key features:

- Triangular format waveguides for enhanced pattern control
- Low resonance fibreglass composite construction
- Integrated flying and mounting system
- Optional floor stand or flying bracket
- Internal electronic HF protection

Applications:

- High impact nightclub
- VIP room
- Indoor and outdoor dance events
- Bar, club, lounge
- Live music venues

The aesthetically striking Tri Motion pushes sonic and creative frontiers, providing extraordinary efficiency and controlled dispersion, perfect for larger venues requiring cutting-edge performance.

Specifications

Frequency Response	120 Hz - 20 kHz ±3 dB
Efficiency[1]	LF: 107 dB 1W/1m, HMF: 110 dB 1W/1m
Crossover Points	LF: 120 Hz and 500 Hz, HMF: 500 Hz - Passive 1.4 kHz
Nominal Impedance	LF: 8 Ω, HMF: 8 Ω
Power Handling[2]	LF: 700 W AES, MHF: 250 W AES
Maximum Output[3]	135 dB cont, 138 dB peak
Driver Configuration	1 x 15" LF, 1 x 8" MF, 1 x 1.5" HF compression driver
Dispersion	90°H x 60°V
Protection	Internal Electronic Control
Connectors	2 x 4-pole speakON™ NL4
Weight	47.1 kg (103.8 lbs)
Enclosure	Fibreglass composite
Rigging	Integral mounting system
Colour	Custom colours available upon request

[1] Measured in half space [2] AES2 - 1984 compliant [3] Calculated

©2018 Void Acoustics Research Ltd.

Version 1.0

This information is subject to change without notice.
For the latest online version, visit: www.voidacoustics.com

Tri Motion

Architectural specifications

The loudspeaker shall be an active three-way bi-amped system consisting of one high power 15" (380 mm) isometric triangular horn loaded low frequency (LF) transducer with a two way mid-high frequency section consisting of an 8" (200 mm) isometric triangular horn loaded mid-high frequency (MHF) transducer and one 1.5" (38.1 mm) diameter exit high frequency (HF) compression driver mounted on a waveguide. Both the LF and MHF transducers shall be enclosed in separate and independent moulded fibreglass composite cabinet with a smooth cellulose finish of any RAL colour.

The LF and MHF transducers shall be constructed on a cast aluminium frame, with a treated paper cone, 63.5 mm (4") for the LF and 50.8 mm (2") for the MHF voice coil, wound with copper wires on a high quality voice coil former, for high power handling and long term-reliability. The HF transducer shall project it's sound through a high precision wave-guide with a 200 mm (8") baffle to achieve pattern control and low distortion.

Performance specifications for a typical production unit shall be as follows: the usable on-axis bandwidth shall be 120 Hz to 20 kHz (±3 dB) and shall average 60° directivity pattern on the vertical axis and 90° on the horizontal one (-6 dB down from on-axis level) from 1 kHz to 12 kHz. Maximum SPL shall be 138 dB peak measured at 1 m using IEC268-5 pink noise. Crossover points shall be at 500 Hz and 1.4 kHz using 3rd order filters (18 dB per octave). The system shall be powered by its own dedicated power amplification module with DSP management. The wiring connection shall be via two Neutrik speakON™ NL4 (one for input and one for loop-out to another speaker), to allow for pre-wiring of the connector before installation.

The enclosures shall be bolted onto a powder coated steel frame using no less than four M8 bolts per horn. This frame aligns the horns in the correct acoustic space to achieve constant directivity across the loudspeaker system's entire dispersion. The frame will incorporate mounting holes for a U bracket fixture for attaching to ceiling, wall and ground stack mounting brackets. The external dimensions of the enclosures and frame shall be (W) 810 mm x (H) 515 mm x (D) 720 mm (31.9" x 20.3" x 28.3"). Weight shall be 47.1 kg (103.8 lbs).

The loudspeaker shall be the Void Acoustics Tri Motion.

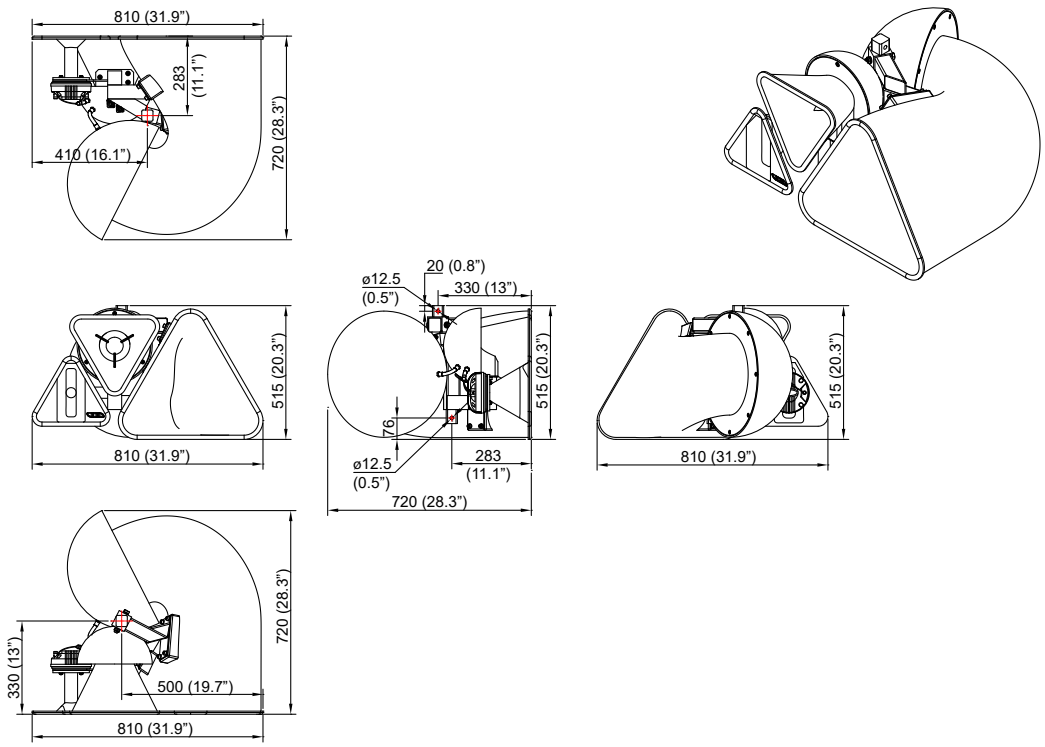

Void Acoustics and the Void logo are registered trademarks of Void Acoustics Research Ltd. in the United Kingdom, USA and other countries; all other Void trademarks are the property of Void Acoustics Research Ltd.